DRAWING NOT TO BE USED FOR CONSTRUCTION

THE STORMCEPTOR SYSTEM IS PROTECTED BY ONE OR MORE OF THE FOLLOWING PATENTS:
United States Patent No. 5,753,115 • 5,849,181 • 6,068,765 • 6,371,690 • 7,582,216 • 7,666,303 | Australia Patent No. 693,164 • 707,133 • 729,096 • 779,401 • 289,647 • 2008,279,378 • 2008,288,900 | Canadian Patent No. 2,009,280 • 2,137,942 • 2,175,277 • 2,180,305 • 2,180,383 • 2,206,338 • 2,327,768 | Indonesian Patent No. 007058 | Japan Patent No. 3581233 • 9-11476 | Korea Patent No. 10-1451593 • 0519212 | Malaysia Patent No. 118987 | New Zealand Patent No. 314,646 • 583,583 • 583,008 | South African Patent No. 2010/00683 • 2010/01796 |

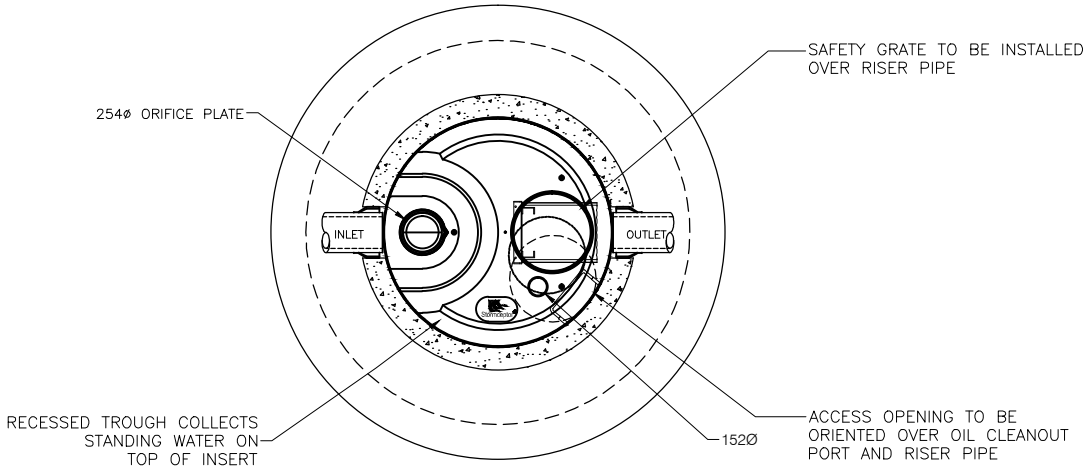

PLAN VIEW

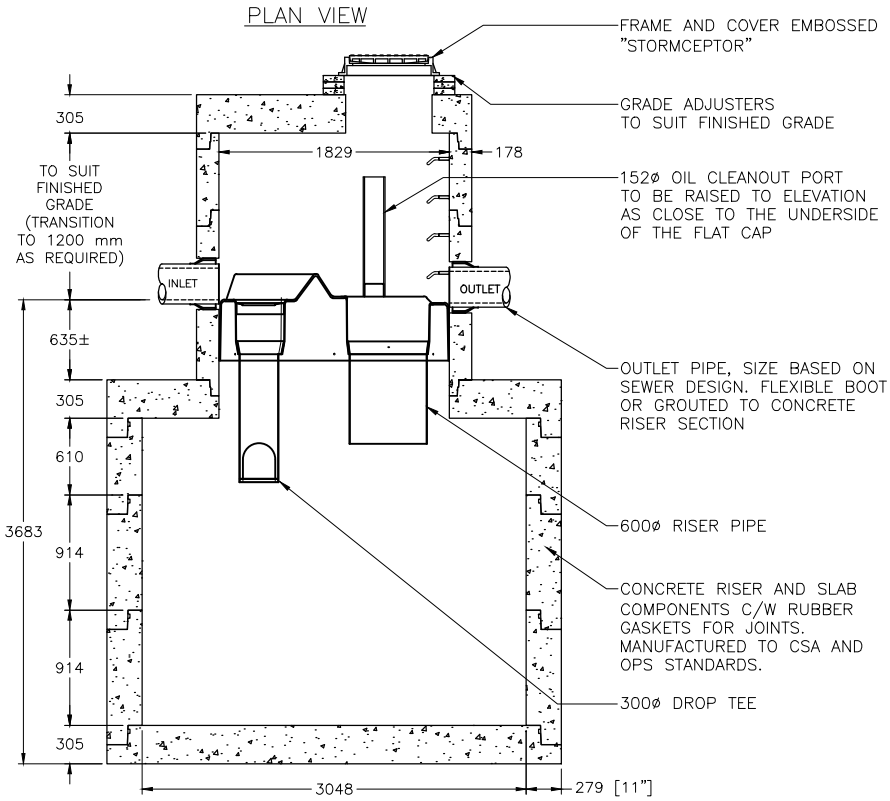

SECTION VIEW

Stormceptor®

THE DESIGN AND INFORMATION SHOWN ON THIS DRAWING IS PROVIDED AS A SERVICE TO THE PROJECT OWNER, ENGINEER AND CONTRACTOR BY IMBRIUM SYSTEMS ("IMBRIUM"). NEITHER THIS DRAWING, NOR ANY PART THEREOF, MAY BE USED, REPRODUCED OR MODIFIED IN ANY MANNER WITHOUT THE PRIOR WRITTEN CONSENT OF IMBRIUM. FAILURE TO COMPLY IS DONE AT THE USER'S OWN RISK AND IMBRIUM EXPRESSLY DISCLAIMS ANY LIABILITY OR RESPONSIBILITY FOR SUCH USE. IF DISCREPANCIES BETWEEN THE SUPPLIED INFORMATION UPON WHICH THE DRAWING IS BASED AND ACTUAL FIELD CONDITIONS ARE ENCOUNTERED AS SITE WORK PROGRESSES, THESE DISCREPANCIES MUST BE REPORTED TO IMBRIUM IMMEDIATELY FOR RE-EVALUATION OF THE DESIGN. IMBRIUM ACCEPTS NO LIABILITY FOR DESIGNS BASED ON MISSING, INCOMPLETE OR INACCURATE INFORMATION SUPPLIED BY OTHERS .

imbrium
WWW.IMBRIUMSYSTEMS.COM
605 GLOBAL WAY, SUITE 113, LINTHICUM, MD 21231
USA 888-279-8826 CA 800-565-4801 INTL +1-416-960-9900

STC 4000
STANDARD MODEL

#####

REV #	DATE	REVISION DESCRIPTION	BY

SHEET NUMBER 1 OF 1

DATE: ######## | SCALE: 50 | PROJECT No.: ##### | DRAWN: ### | CHECKED: ###

I:\IMBRIUM\PRIVATE\CAD\STANDARD PRODUCT LINE\STORMCEPTOR STC\STC - NEW IMBRIUM METRIC TEMPLATE\STC 4000.DWG 1/6/2015 11:31 AM