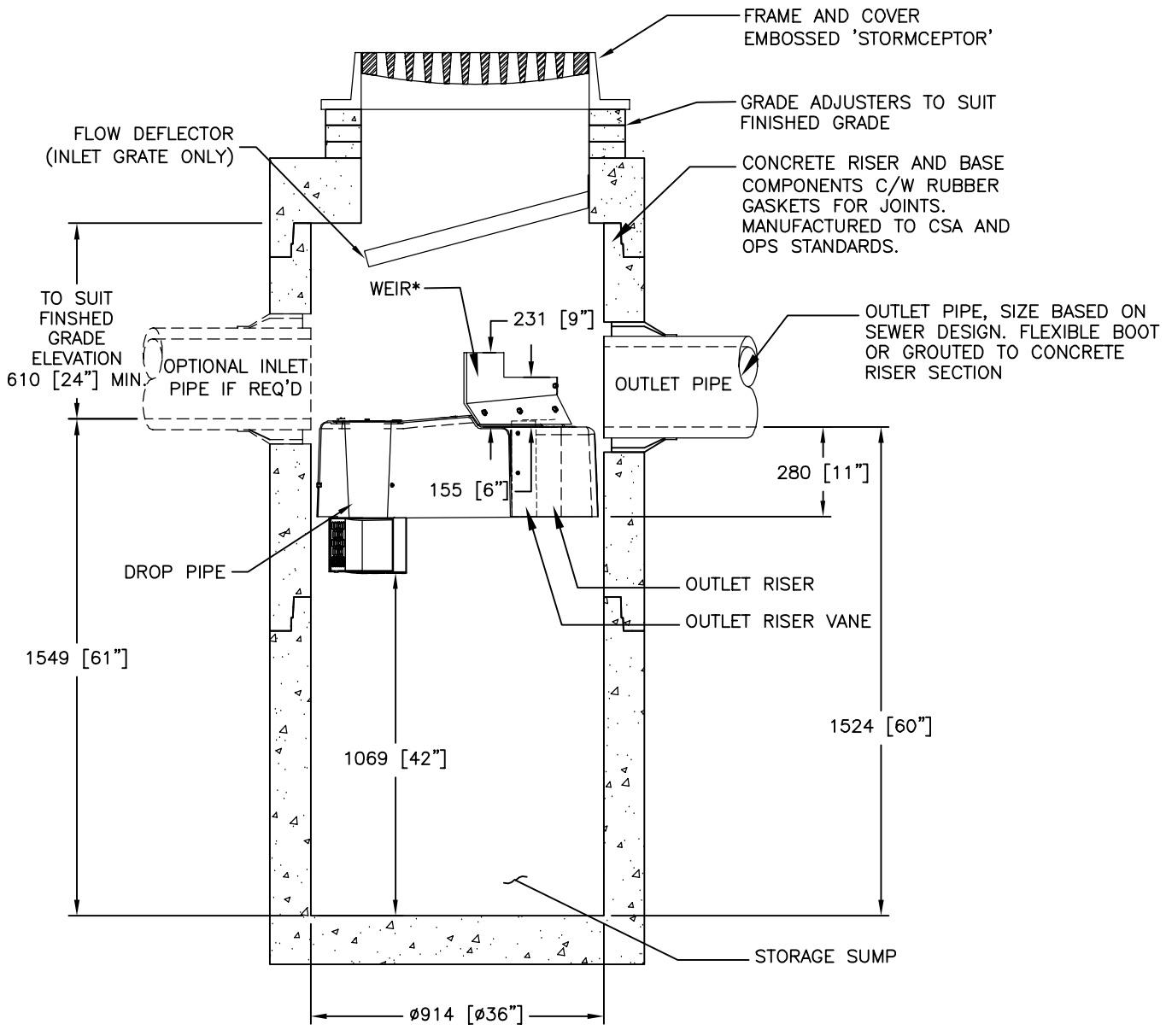


SECTION VIEW

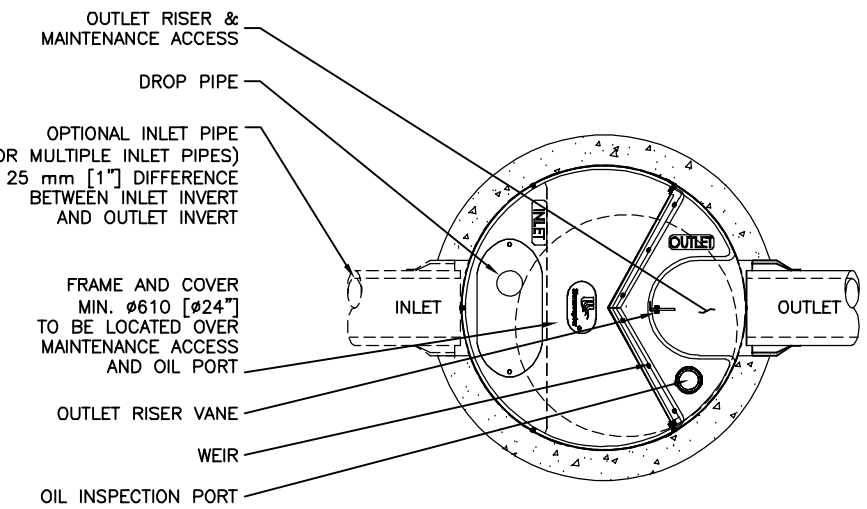


PLAN VIEW (STANDARD)

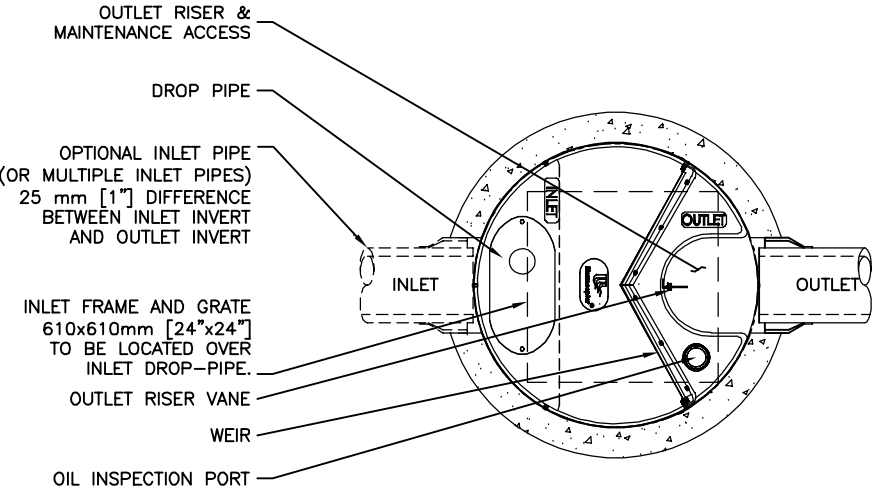


PLAN VIEW (INLET TOP)

FOR SITE SPECIFIC DRAWINGS PLEASE CONTACT YOUR LOCAL STORMCEPTOR REPRESENTATIVE. SITE SPECIFIC DRAWINGS ARE BASED ON THE BEST AVAILABLE INFORMATION AT THE TIME. SOME FIELD REVISIONS TO THE SYSTEM LOCATION OR CONNECTION PIPING MAY BE NECESSARY BASED ON AVAILABLE SPACE OR SITE CONFIGURATION REVISIONS. ELEVATIONS SHOULD BE MAINTAINED EXCEPT WHERE NOTED ON BYPASS STRUCTURE (IF REQUIRED).

**GENERAL NOTES:**

* MAXIMUM SURFACE LOADING RATE (SLR) INTO LOWER CHAMBER THROUGH DROP PIPE IS 1135 L/min/m$^2$ (27.9 gpm/ft$^2$) FOR STORMCEPTOR EF3 AND 535 L/min/m$^2$ (13.1 gpm/ft$^2$) FOR STORMCEPTOR EFO3 (OIL CAPTURE CONFIGURATION). WEIR HEIGHT IS 150 mm (6 INCH) FOR EF3.

1. ALL DIMENSIONS INDICATED ARE IN MILLIMETERS (INCHES) UNLESS OTHERWISE SPECIFIED.
2. STORMCEPTOR STRUCTURE INLET AND OUTLET PIPE SIZE AND ORIENTATION SHOWN FOR INFORMATIONAL PURPOSES ONLY.
3. UNLESS OTHERWISE NOTED, BYPASS INFRASTRUCTURE, SUCH AS ALL UPSTREAM DIVERSION STRUCTURES, CONNECTING STRUCTURES, OR PIPE CONDUITS CONNECTING TO COMPLETE THE STORMCEPTOR SYSTEM SHALL BE PROVIDED AND ADDRESSED SEPARATELY.
4. DRAWING FOR INFORMATION PURPOSES ONLY. REFER TO ENGINEER'S SITE/UTILITY PLAN FOR STRUCTURE ORIENTATION.
5. NO PRODUCT SUBSTITUTIONS SHALL BE ACCEPTED UNLESS SUBMITTED 10 DAYS PRIOR TO PROJECT BID DATE, OR AS DIRECTED BY THE ENGINEER OF RECORD.

**INSTALLATION NOTES**

A. ANY SUB-BASE, BACKFILL DEPTH, AND/OR ANTI-FLOTATION PROVISIONS ARE SITE-SPECIFIC DESIGN CONSIDERATIONS AND SHALL BE SPECIFIED BY ENGINEER OF RECORD.
B. CONTRACTOR TO PROVIDE EQUIPMENT WITH SUFFICIENT LIFTING AND REACH CAPACITY TO LIFT AND SET THE STRUCTURE (LIFTING CLUTCHES PROVIDED)
C. CONTRACTOR WILL INSTALL AND LEVEL THE STRUCTURE, SEALING THE JOINTS, LINE ENTRY AND EXIT POINTS (NON-SHRINK GROUT WITH APPROVED WATERSTOP OR FLEXIBLE BOOT)
D. CONTRACTOR TO TAKE APPROPRIATE MEASURES TO PROTECT THE DEVICE FROM CONSTRUCTION-RELATED EROSION RUNOFF.
E. DEVICE ACTIVATION, BY CONTRACTOR, SHALL OCCUR ONLY AFTER SITE HAS BEEN STABILIZED AND THE STORMCEPTOR UNIT IS CLEAN AND FREE OF DEBRIS.

# STANDARD DETAIL
# NOT FOR CONSTRUCTION

## SITE SPECIFIC DATA REQUIREMENTS

| | | | | | |
|---|---|---|---|---|---|
| STORMCEPTOR MODEL | EF3 | | | | |
| STRUCTURE ID | | | | | * |
| WATER QUALITY FLOW RATE (L/s) | | | | | * |
| PEAK FLOW RATE (L/s) | | | | | * |
| RETURN PERIOD OF PEAK FLOW (yrs) | | | | | * |
| DRAINAGE AREA (HA) | | | | | * |
| DRAINAGE AREA IMPERVIOUSNESS (%) | | | | | * |
| PIPE DATA: | I.E. | MAT'L | DIA | SLOPE % | HGL |
| INLET #1 | * | * | * | * | * |
| INLET #2 | * | * | * | * | * |
| OUTLET | * | * | * | * | * |

* PER ENGINEER OF RECORD

The design and information shown on this drawing is provided as a service to the project owner, engineer and contractor by Imbrium Systems ("Imbrium"). Neither this drawing, nor any part thereof, may be used, reproduced or modified in any manner without the prior written consent of Imbrium. Failure to comply is done at the user's own risk and Imbrium expressly disclaims any liability or responsibility for such use.

If discrepancies between the supplied information upon which this drawing is based and actual conditions are encountered, please notify Imbrium immediately. discrepancies must be reported to Imbrium immediately for re-evaluation of the design. Imbrium accepts no liability for design based on incomplete, inaccurate or inaccurate information supplied by others.

| MARK | DATE | REVISION DESCRIPTION | BY |
|---|---|---|---|
| 1 | 6/8/18 | UPDATES | JSK |
| 0 | 5/26/17 | INITIAL RELEASE | JSK |

Stormceptor® EF

SCALE = NTS

imbrium®
407 Fairview Dr. Whitby, ON L1N 9A9
TF 800-565-6951 CA 416-960-9900 INTL +1-416-960-9900

DATE: 5/26/2017
DESIGNED: BF
DRAWN: BF
CHECKED: JG
APPROVED: BF
PROJECT No.: EF3
SEQUENCE No.: *
SHEET: 1 OF 1